Double Beam Screeder Type DTA

Instruction Manual

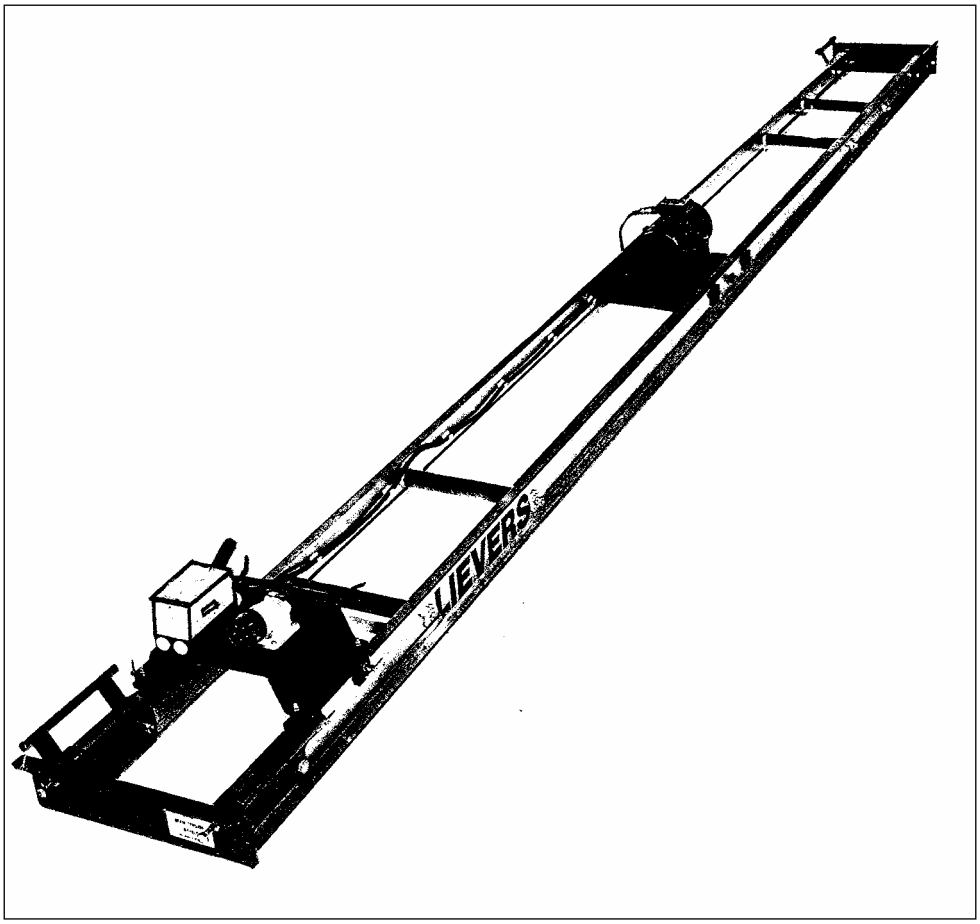

Lievers B.V. Holland
P.O. Box 103
3640 AC Mijdrecht
Telephone +31 (0)297 23 1900
Telefax +31 (0)297 23 1909
E-mail: info@lieversholland.nl
www.lieversholland.nl

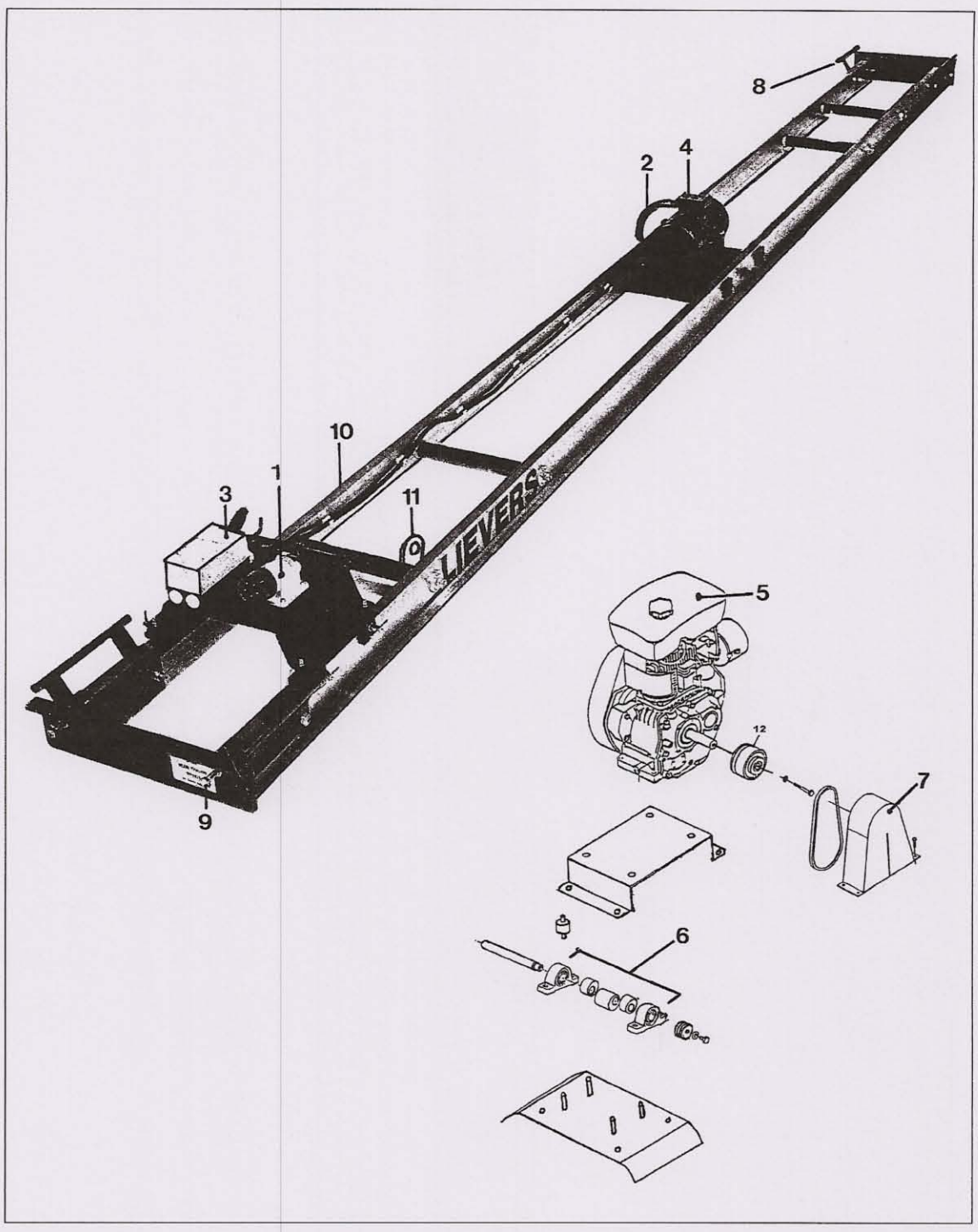

Figure 0.1 View of the most important components

1 Surface socket
2 Supply cable
3 Reversing switch
4 Vibrating motor
5 Gasoline engine
6 Exzenter
7 V-belt protection cap
8 Handle
9 Clamping bolt
10 Beam
11 Transport lug
12 Centrifugal clutch

Bouwmachinefabriek Lievers B.V.
P.O. Box 103
3640 AC Mijdrecht
The Netherlands

Telephone +31 297 23 1900
Telefax +31 297 23 1909

Website: www.lieversholland.nl
E-mail: info@lieversholland.nl

Edition 1.0
Bouwmachinefabriek Lievers B.V.
Construction file (CE) nr. DTA 001

II GENERAL SAFETY-ASPECTS

All Lievers equipment have been tested in accordance with the strict international safety standards. This section contains general advice and apply to several machines mentioned in this paragraph.

- Ensure that you are qualified (familiar with the contents of this manual), to operate and carry out light maintenance-work to the machine when you are operating the machine for the first time.

- Wear safety shoes with extra protection (steel caps and anti-slip soles)

- Wear a safety helmet,safety glasses, working gloves, which do not conduct electricity and protective clothing.

- Ensure, that all symbols on the machine, can always be clearly read.

- Do not leave any tools or parts lying around on the work floor, as this can cause accidents.

- Watch where you are going, the ground can be slippery.

- Take care that you do not injure yourself on objects, such as scaffolding and reinforcement materials, which can be found directly or indirectly in the working area.

- Be careful when lifting and carrying the machine.Do not bend forwards when picking up the apparatus, but bend your knees.Ensure that the working area is within your reach, sothat you do not have to bend forward.

- When cleaning the machine, ensure that no water or cleaning detergents get into the motorhousing.

- When the machine is not being used for longer periods of time, then it must be stored in a dry and clean area.

- *Do not only pay attention to your own safety, but also to that of your colleagues.*

Regular maintenance of the machine promotes safe operation.

The following safety-aspects specifically apply to those Lievers products which are equipped with an electrical drive unit.

- Place the wires between the electrical source and the work place in such a way, that they cannot be damaged and your colleagues cannot trip over them.

- Do not use the machine in an explosion endangered area.

- Check that the electrical source complies with the local valid regulations.Use earthed extension leads, when it is necessary to use extension leads.

- Use an electrical source which is provided with an earth leakage switch or attach a safety transformer between the electrical mains and the machine.

- If you want to connect a machine to a mains voltage of 380VAC, 3 phase, ensure that the supply-cable has an earthlead and that the plug complies to the valid regulations.

- Ensure that the wall socket and possible connections between the extension leads are protected against dampness.

- Do not pull the plug out of the wall socket or extension lead by its lead.

- Regularly check the connections of the supply-cable to the switch.

- Check the feeder cable's outercasing and if in use extension lead's outercasing before you connect the machine to the electrical mains.The outercasing may not be damaged.Replace the cable if you cannot read the marks on the outercasing anymore.

- Check the machine's cable-connections before you connect the machine to the electrical mains. The cables must be properly connected.

- Switch off the machine, when the electrical power cuts off.This prevents the machine from starting suddenly when the electrical power comes on again.

- Disconnect the electrical supply to the machine, before you start to clean or maintain the machine.

- Ensure that the ventilation slots of the machine are free from dirt and moisture.

The following safety-aspects specifically apply to those Lievers products which are equipped with a petrol-engine.

- Do not use the screed with petrol-engine indoors or in poorly ventilated places, such as pits etc.

- Make sure that there is sufficient ventilation in spaces which are surrounded by walls.Never inhale exhaust gasses, they can damage your health and that of your colleagues.

- To avoid getting an electric shock, do not touch the high-tension cable or spark plug cap while the engine is running.

- Check for fuel leaks before running the machine.

- Do wear working-gloves, safety glasses and protecting clothing during refueling.

- Make sure that there is sufficient ventilation during refueling.

- Refueling of fuel is only allowed after the engine has been cooled off sufficiently.

- Refueling of fuel , while the engine is hot, might lead to a very dangerous situation.

It is strictly forbidden to refuel :
* in the direct vicinity of open fire or other flammable materials,
* while smoking cigarettes etc.
* in explosion endangered spaces.

Explanation of the used safety symbols

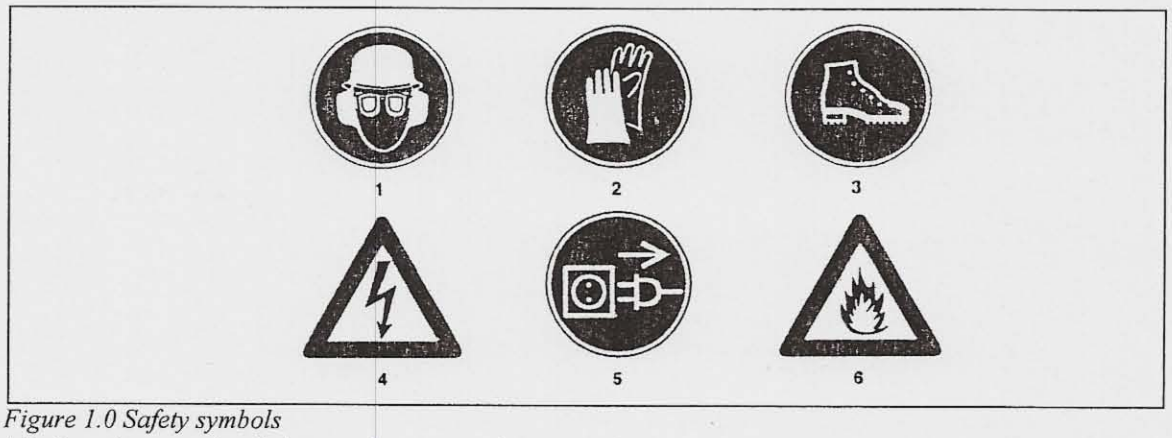

Figure 1.0 Safety symbols
1 Safety glasses, safety helmet and ear protection compulsory.
2 Working gloves compulsory.
3 Safety shoes with extra protection compulsory.
4 Dangerous electrical voltage.
5 Before opening the motorhousing remove the plug.
6 Inflammable material.

***TIP**: If the safety aspects are not clear to you, then please contact the manufacturer for further information.*
Manufacturer:
Lievers Holland
Department: service
Telephone: + 31
Telefax: + 31

1 INTRODUCTION

This manual has been written to help you operate and service the double beam screeder safely.
This manual is intended for dealers and operators of the beam screeder type DTA.

1.1 WHAT IS A SCREED VIBRATOR?

A screed vibrator type DTA is an apparatus with 2 vibrating aluminium beams that smoothens and compacts freshly poured concrete in one operation. Screed board vibrators are used for the construction of: Concretefloors, stablefloors, viaducts, runways, concretepaths and industrial flooring.

1.2 OPERATION

The screeder is started by means of a thermical overload and reversing switch or by pulling the rope of the recoilstarter of the gasoline type beam screeder.
The aluminium beams vibrate by means of an electric vibrating motor or by means of a vibrator (excentric) driven by a gasoline engine.Through the vibrations of the aluminium beams the concrete is compacted , levelled and smoothend in one operation.

1.3 TECHNICAL DATA

Double Beam Screeder Type DTA

Type	Number of beams	Supply Voltage Vibrating motor	Engine Capacity	Current intensity in Amperag e	Number of Vibrations	Adjustable Centr.force	Weight in Kgs.
DTA – 230	2	230V./50Hz.1Phase	240 W.	1.04 Amp.	3.000 p/min.	0 – 240 Kg.	23
DTA -400/1	2	400/230V.50Hz. 3Ph.	180 W.	0,42 / 0,75 Amp.	3.000 p/min.	0 – 300 Kg.	23
DTA -400/2	2	400/230V.50Hz. 3Ph.	420 W.	0,67 / 1,28 Amp.	3.000 p/min.	0 - 500 Kg.	33
DTA – 42*	2	42V. / 200Hz. 3 Ph.	530 W.	8,2 Amp.	6.000 p/min.	0 – 500 Kg.	33
DTA – Petrol	2	Robin Engine EY-15	2700 W.	----------	3.000 p/min.	0 – 300 Kg.	33

Table 1.0 Technical data DTA screeder.

**** The double screeder type DTA-42 can only be connected to a frequency-convertor which supplies a secondary voltage of 42-48V. 200Hz. 3 Phase.***

Sealing : DTA-230, DTA-400 (1&2), and DTA-42: IP 65
DTA-Petrol : IP 54
Isolationclasse : All electric vibrating motors used on the DTA double screeders are constructed in confirmation with Isolationclasse E (IEC NORM 144)
Execution : Portable (2 men).
Dimensions : Depends on the length of the beams.

Weight vibrating frame & Outrigger.

Length beam	Weight alu.beam excl. vibrating unit	Applicable vibrating unit				
		230 V	400 V type 1	400 V type 2	42 V	Petrol
3,2 meter	35 Kgs.	*	*		*	*
4,2 meter	45 Kgs.	*	*		*	*
5,2 meter	55 Kgs.	*	*		*	*
6,2 meter	65 Kgs.			*	*	*
7,2 meter	75 Kgs.			*	*	*
Outrigger	22,5 Kgs.					

Table 1.1 Weights vibrating frames & outrigger *Applicable vibrating unit*

2 Operation instructions

This paragraph describes the use of the screed vibrator type DTA.

Tip:For the location and description of the screeder's parts, which are mentioned in the text, we refer to the illustration figure 0.1 on the back of the cover.

Assembly instruction screeder Type DTA.

To simplify transportation the DT screeder is supplied in 3 basic parts:

1. Electric- or Petrol driven vibratorunit.
2. Switch-unit.
3. Aluminium beam unit.
4. Outrigger (optional).

To assemble the above mentioned parts you need proper fitting wrenches:
Wrench 24 to assemble the vibrator-unit.
Wrench 22 and 19 to assemble the outrigger (optional)

Assembly of the vibrator-unit.

The vibrator unit is mounted onto the beams by means of 2 threaded ends with nuts M16.
Place the vibrator-unit in the middle of the beams and tighten the 2 nuts with a 24 mm wrench.

Assembly of the switch-unit.

The switch-unit is placed at the end of the beam and tightend by hand through the 2 wingbolts, (do not use a hammer).
Attach the motor supply-cable to the clamps on the beam.
Danger: Do not leave the supply-cable hanging loose between the switch and the vibrating-unit. Loose-hanging cables could easily be damaged and endanger the operator.

Stressing the DTA alum. beams.

On the double beam screeder stressing bars are inserted along the top hollow section of both beams to eliminate sag. With this system the operator can adjust the beams from completely level to a slight convex condition.

To set the beams to completely level proceed as follows: (see figure 2.0)
Loosen locknut nr. 13 and tie a length of string along the bottom side of the beams. Tighten the stressing screw nr. 12 on both beams until the bottom side of the beams is level with the string.
(By loosening srew nr. 12 the beams can be adjusted to a convex condition).
Now tighten locknut nr. 13 again.

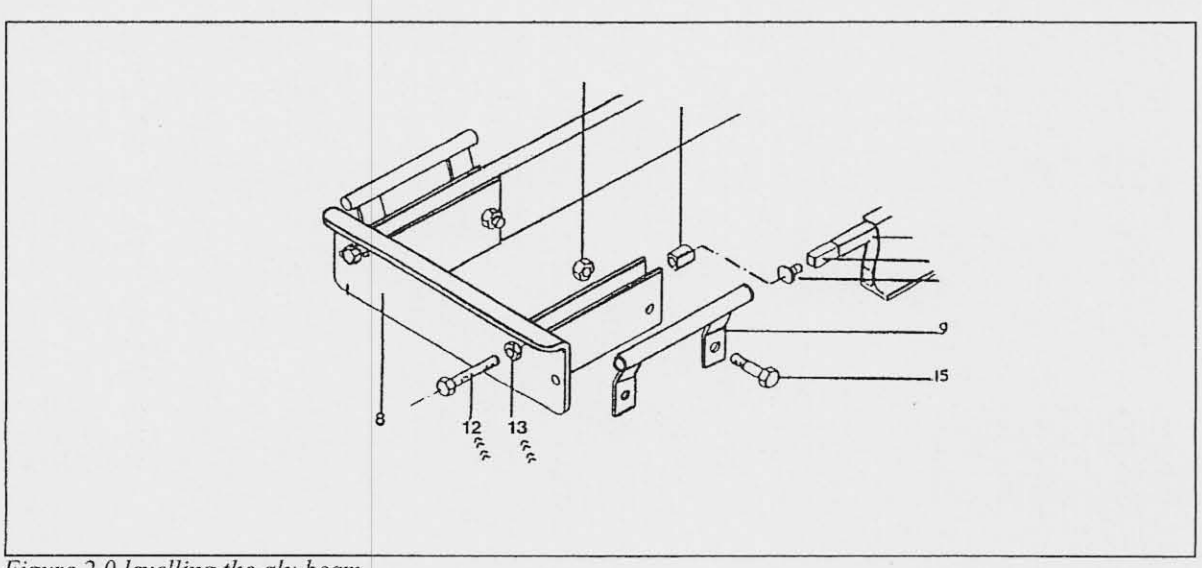

Figure 2.0 levelling the alu.beam.

2.2 Operation instructions.

This chapter describes the use of the complete range of double beams Type DTA.

Attention: *Read the safety instructions before you start working with the screeder.*

1. Check the controls before switching on the screeder,
2. Unsure that the mains voltage is sufficiently fused,
3. Make sure that the rail supports and screeder are set to the right level,
4. Place the screeder on the rail support system,
5. Check that the switch is in the "OFF" position,
6. When using the screeder type DTA-42V. 200Hz. first switch on the convertor before switching on the screeder,
7. The screeder type DTA-Petrol is operated in the same way as the screeders with an electric vibrating motor. Through the gasthrottle the operator can adjust the revolutions of the petrol-engine. ***Before starting the gasoline engine read the operation instructions carefully.***

8. Maintain a roll of concrete 20 to 30mm high evenly along the front of the leading beam.
9. Switch on the screeder and check the travel direction.
10. By means of the reversing switch the operator can set the right travel direction.

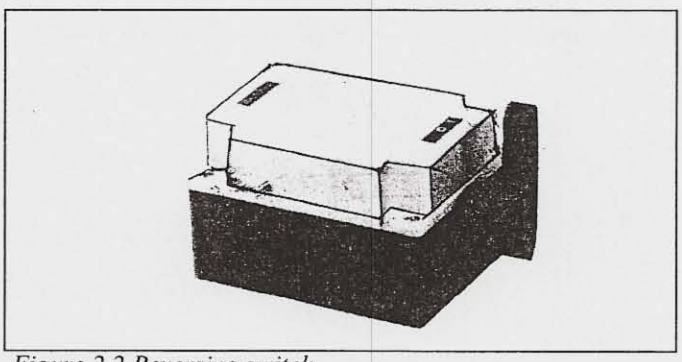

Figure 2.2 Reversing switch.

11. Now slowly pull the beam with the drag ropes across the rail support system. The travelspeed depends on the consistency of the concrete
12. Check wether the screeder is vibrating steadily on the rail support system. If the vibrations are too strong the surface of the concrete will be rough and waveform like. Too strong a vibration will also cause a bad travelling of the screeder. A well adjusted screeder will create a level, smooth and shining surface.

To adjust the right number of vibrations and centrifugal force of the vibrating motor please read chapter 3 (trouble shooting) carefully.

13. After the job is finished first switch off the screeder before removing the plug. When using a gasoline type of screeder, push the stopbutton of the petrol engine.

14. After use, clean the sceeder according to the instructions described in chapter 4 of this manual. Place the screeder on a dry and stable surface.

TIP: We strongly recommend to spray the complete beam-unit with form oil. By using this oil the frame will be very easy to clean.

Assembly instruction for the outrigger.

Loosen the 2 inner self-locking screws nr. 16 (M14) in the endframe and push screws nr. 15 to the outside untill the are level with the steel plate of the end frame. Offer the outrigger assembly to the beam so that the cranked stays (16) are clamped to the sides of the inner plates of the end brackets using the original nuts and bolts with a 22mm wrench.
Loosen the 2 self-locking nuts nr. 14, (M12) from the first cross tube and discard the washers nr. 4, thread-end nr. 3, cross tube nr. 2 and transport lug nr. 17. Insert the cross tube nr. 2 between the 2 adjustable strips nr. 59 and insert the strips between the beams.
Re-insert the transport lug nr. 17 and washer nr. 4 between the adjustable strips and alu.beam again.
Push thread end nr. 3 into the holes and assemble the 2 washers nr. 4 and nuts nr. 14 onto the thread-end.
Tighten the nuts with wrench nr. 19 properly.
Please keep the spacers in a safe place, you will need them again when you are working without outriggers.

Now adjust the outrigger by displacing the alu.clamps nr. 54 ajacent the adjustable strips nr. 58 & 59.

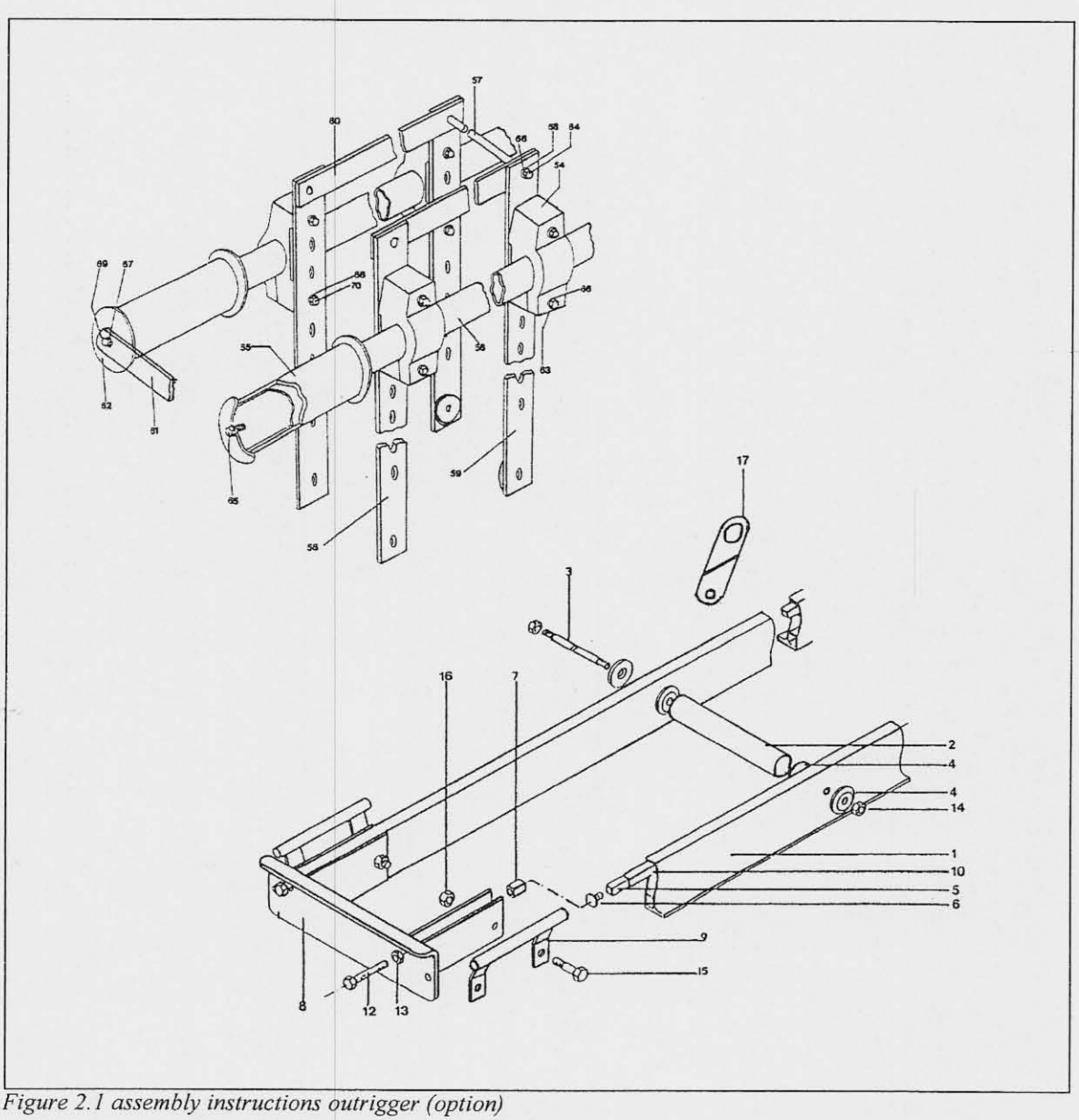

Figure 2.1 assembly instructions outrigger (option)

3. Trouble shooting

If the screeder is not operating properly then one or more of the following problems could be the cause.

- **Problem: The connected and activated screeder does not get into the required number of revolutions or fails to start:**

Cause:
Insufficient current supply, mainfuse came into operation, damaged supply cable or plug and socket connections that lead to the screeder.

Solution:
Ensure that the supply cable is connected to the required voltage.
Check the plug connections for faults and the mainfuse, replace if necessary.
Check the length of the extension cable - if in use -.Use an extension cable of max. 25m. with a cross section of 2.5mm2

- **Problem:The screeder vibrates very strongly and does not travel smoothly across the rail supports..**

Cause:
The vibrating motor vibrates too strong for the choosen working width and lies therefore very unstable on the rail support system and thus cannot travel in the proper way. The direction of rotation is wrong.

Solution:
Remove the covers (see drawing) of the vibrating motor and adjust the excentrics,both left and right as required by placing them in a different position.
Make sure that both the left and the right excentric is simular adjusted.
When using a gasoline type of screeder you can adjust the revolutions and centrifugal force by reducing the motorspeed to the required vibrations and beamwidth.
When the screeder is travelling in the wrong direction this indicates a wrong direction of rotation of the vibrating motor. Push the knob of the reversing switch in the opposite direction.

Adjusting the centrifugal force of the vibrator.

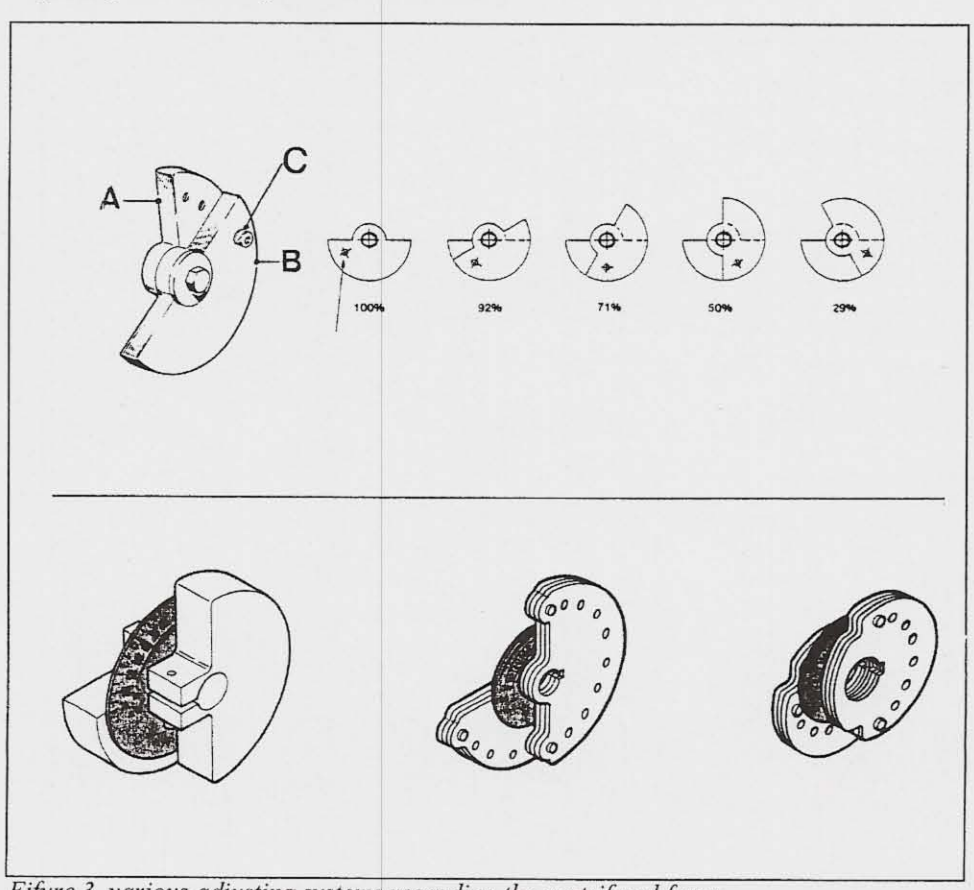

Fifure 3, various adjusting systems regarding the centrifugal force.

- **Problem:The screeder vibrates insufficient and is not self travelling.**

  Cause:
  The centrifugal force of the vibrating motor is set too low.
  There is an excess of concrete along the leading edge.

  Solution:
  Increase the centrifugal force of the vibrating motor, (see figure 3.0 adjusting the centr.force).
  In the event you are using a screeder with a petrol engine you can increase the centrifugal force by increasing the revolutions of the gasoline engine (full throttle).
  Make sure to maintain a roll of concrete of 20 to 30mm evenly spread out along the front of the leading beam.

- **Problem: The screeder type DTA-Petrol fails to start or runs irregularly.**

  Cause:
  Insufficient fuel in the fueltank,
  The oil level in the carnk case is too low, (the petrol engine is equipped with an oilguard and switches off the engine automatically when the oil level is too low.
  The starting procedure was not executed in the proper way.
  A failure in the gasoline engine.

  Solution:
  Refill the fueltank,
  Check the oil level and refill if necessary,
  Read the operation instructions of the gasoline emgine carefully and repeat the starting procedure.

***Careful!**:Faults of frequence occurence are:*
A break in the supply cable.
Incorrect plug connections.
Insufficient maintenance.
The petrol engine is not adjusted in the right way.

***Tip**:Please contact Bouwmachinefabriek I.ievers B.V. if problems occur which are not mentioned in the list, or if a mentioned problem is not solved by the solutions in the list.*

4 Maintenance and repair

4.1 Maintenance

Allthough the screeder has a few moving parts, regular maintenance promotes a long and trouble-free life.

Warning!:Do not clean the screeder with a high pressure cleaner. Disconnect the electrical supply to the screeder before you carry out any maintenance activities to the DTA double beam

It is recommended to spray the aluminum beams prior to operation, with form oil.
Tip: *remove concrete remnants before they harder out. Concrete remnants could easily injure the operator or damage supply cables.*

4.2 Cleaning and servicing of the double beam type DTA. (electric version)

Warning: *disconnect the electrical supply to the screeder before you carry out any maintenance activities to the DTA screeder.*
During concrete compaction the screeder, switch and supply cable will become dirty.
Periodical maintenace is vital to the safe and efficient operation of the machine.It is therefor highly recommended to clean the screeder daily with water and a cleaning detergent, that does not affect the screeder's material.

In order to achieve a maximum cooling effect, the vibrating motor must stay free from dirt and grease.
Make sure that the switch and plug connections stay clean from dirt, grease and concrete.
Check them at the end of each working day.If necessary clean them with a brush or a damp cloth.

If the screeder is not used for a long period of time, store it in a clean, dry and dustfree place.

4.3 Cleaning and servicing of the double beam with Petrol engine.

Daily service:
In order to achieve a maximum cooling effect the ventilation openings must stay free from dirt, grease and concrete. Check them at the end of each working day. If necessary clean them with a brush or a damp cloth.
For a proper funstioning of the carburator's control mechnism, it is necessary to check the carburator for concrete or dirt, each time after use. If necessary clean the control mechanism with a brush or a damp cloth.

Maintenance after 20 hours of operation:
Cleaning of the air- and fuelfilter. Wash out the air- and fuelfilter in clean fuel and wring them out after approx. 10 minutes.

Maintenance after 50 hours of operation:
Cleaning of the piston: remove the carbon from the upper side of the piston, from the exhaust-ports in the cylinder, from the combustion chamber and from the exhaust.
Cleaning of the sparkplug: Clean off carbon deposits on the sparkplug electrode using a plug cleaner or wire brush. Check electrode gap; if necessary adjust it.

Longtime storage:
1. Remove the spark plug and pour approx. 5 cc. of new engine oil into the plug hole. Pull the recoil starter several times and reinstall the spark plug.
2. Slowly pull the recoil starter until resistance is felt. The piston is in its compression stroke.
3. Clean the engine thoroughly with an oiled cloth.
4. Store the engine in a clean and dry place.

Spare parts

It is not strictly necessary to keep spare parts on stock. However, if you want to keep certain spares on stock then please contact the manufacturer / dealer for advise.

Tip: When ordering parts, fill in the order form accurately.

When ordering parts please state the following information:

- Type of screeder.
- Year of construction.
- Order number plus description of the part.
- The required quantity.
- The dispatch address and dispatch mode.

Lievers B.V. declines all responsibility for the supply of incorrect spares due to incomplete or unclear requests.

5 ENVIRONMENT

5.1 Safe disposal

Instructions for the protection of the environment.
The old machine contains valuable materials.Take the discarded apparatus and accessories to the nearest official collection point.

5.2 Construction material

The machine is manufactured from the following materials:

location	Material
Rotor	Steel
Various patrs frame	,,
Outrigger	,,
Motor-stator	Tin sheeted-steel
Various parts	,,
Motor-Stator - winding	Copper
Cable wires	,,
Alum. beams	aluminium
Motorhousing	,,
Cable outer casing	Rubber (neoprene)
Various parts switch	Nylon 6
Various material	,,

Table 5.0 Used construction materials

6 GUARANTEE

6.1 Guarantee provision

All damages to parts of the Screeder which occur within 12 months from the date of purchase and are recognized as possessing manufacturing defects, will be replaced by the manufacturer as soon as possible.

The manufacturer declines all responsibility for damages caused by misuse, incorrect connections, improper installation and maintenance and alterations that have been carried out to the Screeder.

Guarantee is not applicable either if:
- the ventilation slots are not cleaned regularly,
- unqualified personnel (not familiar with the contents of this operation manual) have assembled or dismantled the DTA double beam screeder.
- original Lievers parts have not been assembled,
- the screeder has been stored in a damp environment.
- the screeder has been cleaned with a high pressure cleaner or by water jet under high pressure.
- the guarantee is valid for 12 months from the date of purchase.

6.2 Guarantee-certificate

Double beam Type DTA, Nr.....
Purchase date :.....

Manufacturer:
Bouwmachinefabriek Lievers B.V.
Address: Groot Mijdrechtstraat 68, Mijdrecht, The Netherlands.

C.1 EC-Declaration

EC-Declaration of agreement for machinery
(Directive 2006/42/EC, Annexe II, under A)

Manufacturer: Bouwmachinefabriek Lievers B.V.
Address: Groot Mijdrechtstraat 68, Mijdrecht, The Netherlands

Hereby declares that:

The Double beam screeder Type DTA-230, DTA-400/1, DTA-400/2, DTA-Petrol DTA-42v/200Hz

complies with the regulations for the Machine Directive (No. 2006/42/EC, as lastly modified).

Complies with the following harmonized standards:
NEN-EN 292-1; NEN-EN 292-2

Done in Mijdrecht, 1 May 2004

Signature:

Mr. C.M. de Wit

DTA vibrating unit & switchunit electric execution

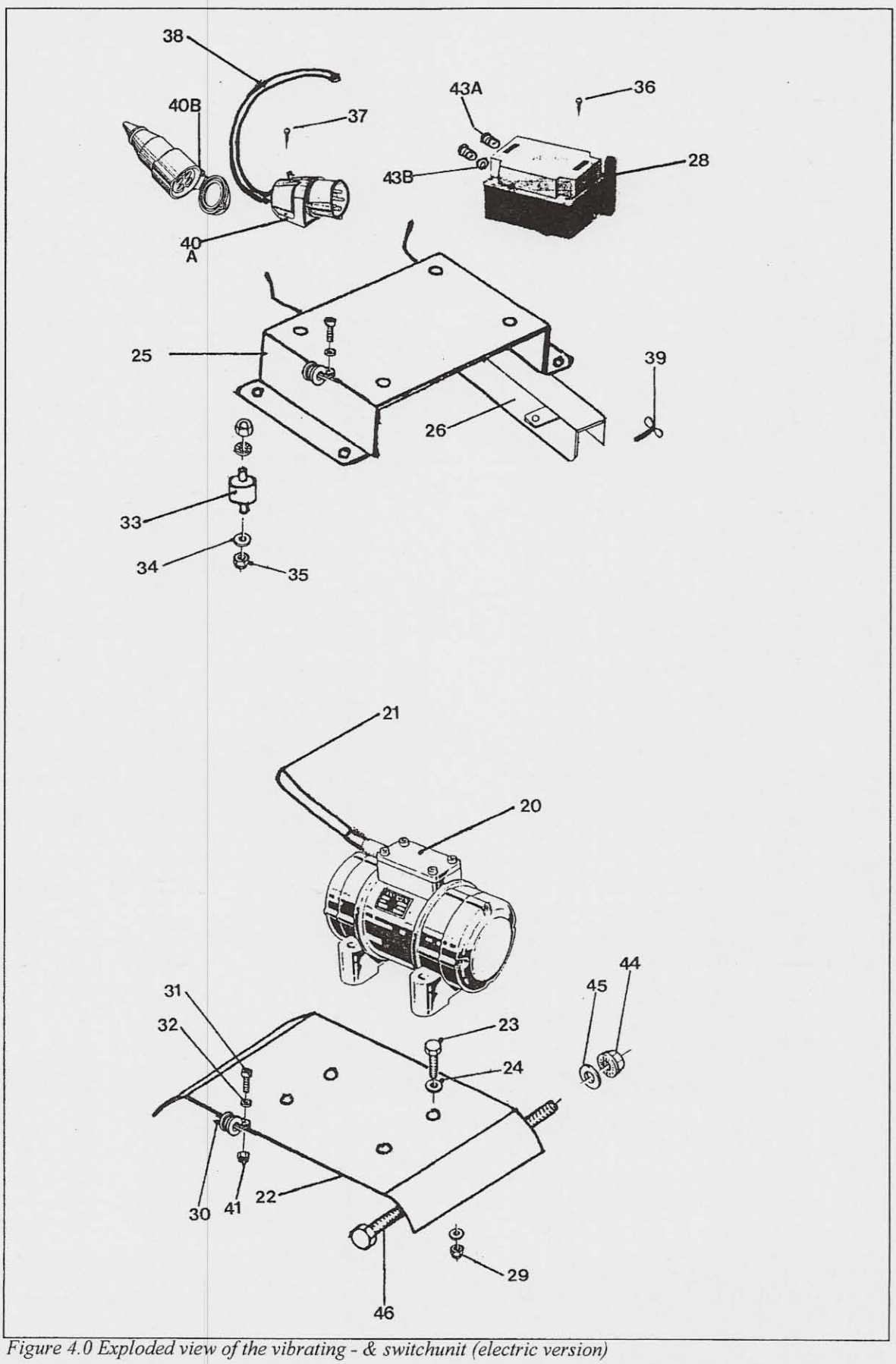

Figure 4.0 Exploded view of the vibrating - & switchunit (electric version)

DTA vibrating unit & switchunit electric execution

Index	Ordernumber	Quantity	Description	
20/1	3213802003	1	Vibrating motor 400V/60Hz-3Phase, 0-300 Kg.Suitable up to 5,2m.	
20/2	3213805003	1	Idem, but 0-500Kg, suitable for all types	
20/3	3222250000	1	Idem, but 230V/60Hz-1Phase, 0-250Kg,suitable up to 5,2m.	
20/4	3214205006	1	Idem, but 42V/200Hz-3Phase, 0-500Kg, suitable for all types	
21/1	0002	4	Cable 4 x 1.5mmq.	
21/2	0003	4	Cable 5 x 1.5mmq.	
22	2222	1	Motor mounting plate	
23/1	0116	4	Bolt M10x100	
23/2	0117	4	Bolt M12x110	
24/1	0156	8	Flat washer M10	
24/2	0157	8	Flat washer M12	
25	2225	1	Switch mounting plate	
26	2226	2	Lower frame switch mounting plate	
28/1	2228N	1	Reversing switch for vibrating motor type 20/1-20/2 and 20/4	
28/2	2100220003	1	Motor reverse switch for motor 220V. 1 Phase, type 20	
29/1	0093	4	Self locking nut M10	
29/2	0094	4	Self locking nut M12	
30	2335	2	Cable clamp	
31	0262	2	Screw M5x16	
32	0153	2	Flat washer M5	
33	0054	4	Rubber buffer	
34	0154	8	Flat washer M6	
35	0100	8	Self locking nut M6	
36	0259	4	Screw M4x10	
37	0263	4	Screw M5x20	
38	0002	50cm	Connection cable betweeb switch and wallsocket	
39	0321	6	Wing nut M8x16	
40/A	0028	1	CEE Wallsocket 4P. 32Amp	
40/B	0027	1	CEE Counterplug 4P. 32Amp.	
41	0099	8	Self locking nut M5	
43/A	0406	2	Plastic packing box PG16	
43/B	0407	2	Plastic nut for the above mentioned packing box.	
44	0095	2	Self locking nut M16	
45	2224	2	Mounting ring for threadend M16	
46	2223	2	Threadend M16 for the assembly of the motor-mounting plate	

Table 4.0Spare parts vibrating unit & switch unit electric execution.

DTA vibrating unit with petrol engine

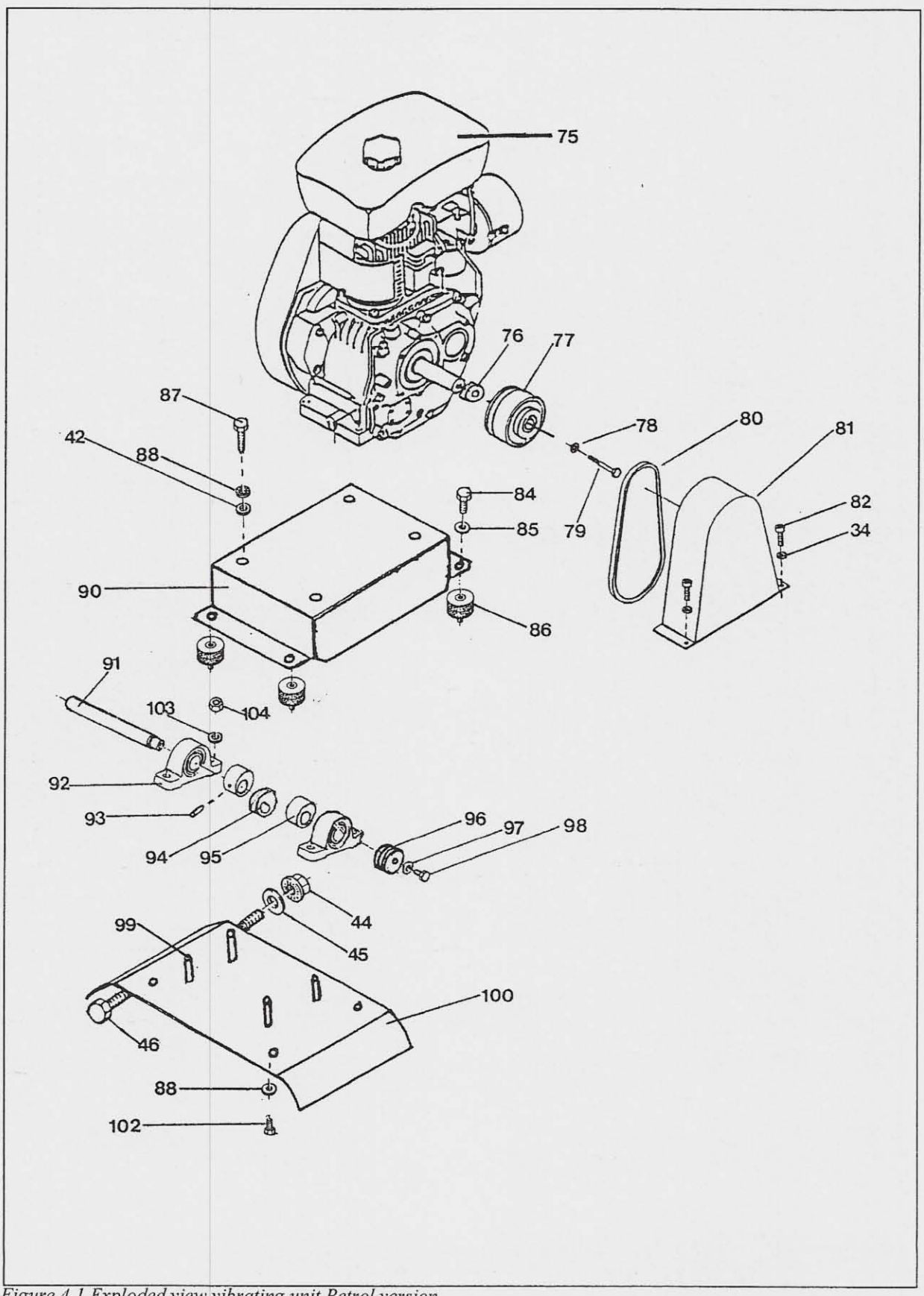

Figure 4.1 Exploded view vibrating unit Petrol version.

DTA vibrating unit with petrol engine

Index	Ordernumber	Quantity	Description	
34	0154	2	Washer M6	
42	0155	8	Washer M8	
44	0095	2	Self locking nut M16	
45	2224	2	Mounting ring M16 for threadend	
46	2223	2	Threadend M16 for the assembly of the motormounting-plate	
75	0078	1	Petrol engine Robin Type EY15-D	
75	0071	1	Petrol engine Robin Type EY15-DU	
76	2376	1	Spacer	
77	2101666011/18	1	Centrigugal clutch shaftdiam. 18mm.for Robin EY15-D	
77	2101666011/19	1	Idem, but shaftdiam. 19mm. for Robin EY15-DU	
78	0162	1	Flat washer 8x25mm.	
79	0127	1	Bolt M8x25 Robin EY15-D	
79	0113	1	Bolt UBF 5/16-24 Robin EY15-DU	
80	2237	1	V-belt A-19	
81	2238	1	V-belt protectioncap	
82	0123	2	Bolt M6x14	
84	0124	4	Bolt M8x10	
85	0212	4	Springwasher M8	
86	0060	4	Rubber buffer 40x30 M8	
87	0129	4	Bolt M8x40	
88	0172	8	Springwasher M8	
90	2231	1	Engine mounting plate	
91	2233	1	Eccentrical shaft	
92	2236	2	Pillowblock	
93	0281	3	Adjusting screw M8x12	
94	2234	1	Eccentric (small)	
95	2235	2	Eccentric (large)	
96	2101666013	1	V-belt poulie	
97	0157	1	Washer M12	
98	0255	1	Bolt M8x12	
99	0136	4	Bolt M14x45	
100	2232	1	Mounting plate of the eccentric	
102	0125	4	Bolt M8x16	
103	0158	4	Washer M14	
104	0102	4	Self locking nut M14	

Table 4.1 Spare parts vibrating unit with petrol engine

DTA aluminium-frame

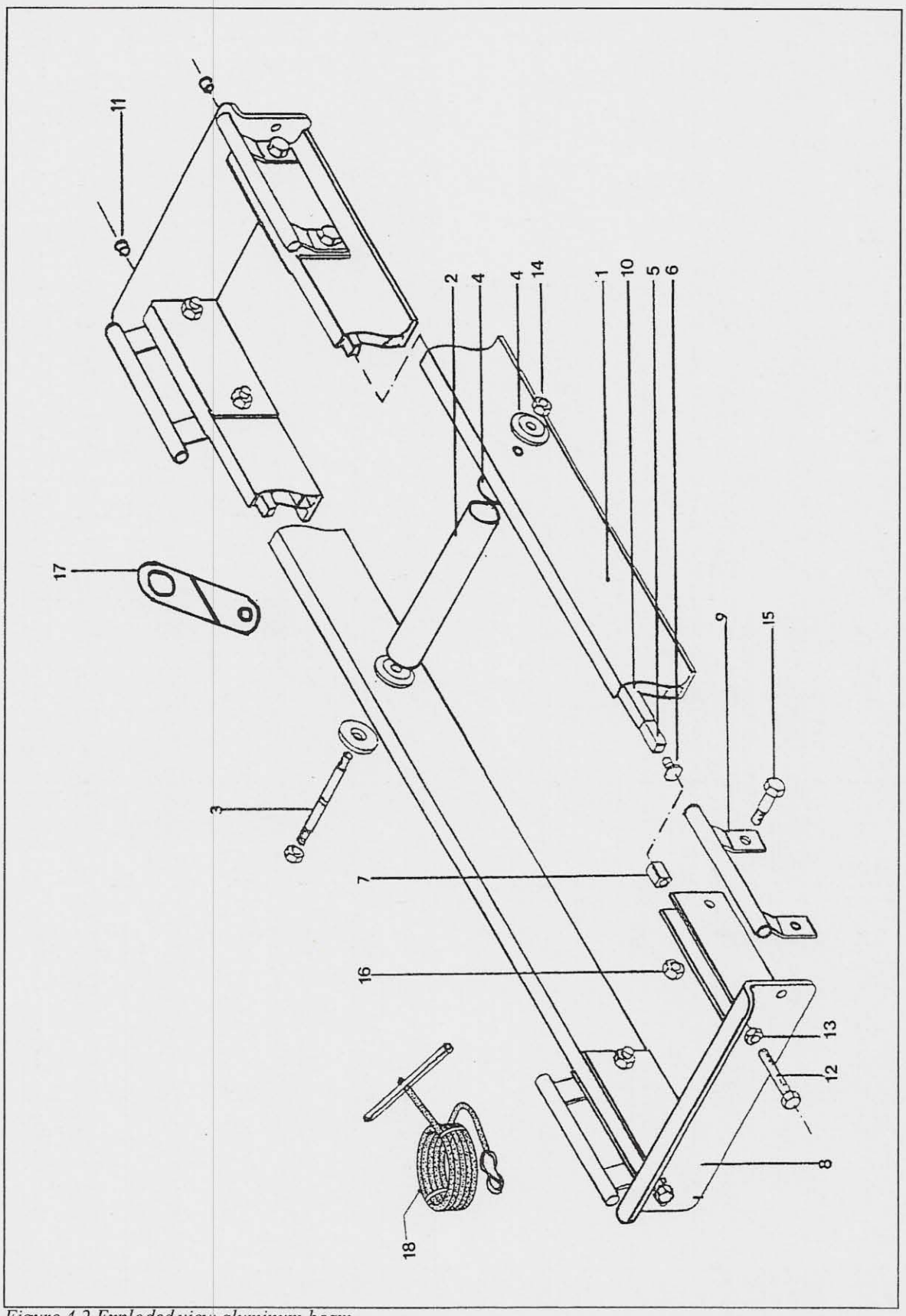

Figure 4.2 Exploded view aluminum beam.

DTA aluminium-frame

Index	Ordernumber	Quantity	Description	
1	2201A	2	Alu. frame 3,2 meter	
	2201B	2	idem, but 4,2 meter	
	2201C	2	idem, but 4,7 meter	
	2201D	2	idem, but 5,2 meter	
	2201E	2	idem, but 6,2 meter	
	2201F	2	idem, but 7,2 meter	
2	2202	2	Spacer of frame	
3	2203	2	Threadends of spacers	
4	2204	8	Mounting ring M12 large	
	2204A	8	Spacer M12	
5	2205A	2	Tensing bar 3,2 meter	
	2205B	2	idem, but 4,2 meter	
	2205C	2	idem, but 4,7 meter	
	2205D	2	idem, but 5,2 meter	
	2205E	2	idem, but 6,2 meter	
	2205F	2	idem, but 7,2 meter	
6	2206	2	Headend of tesioning bar	
7	2207	2	Threadbushing	
8	2208	2	Headframe	
9	2209	4	Carrying handles	
10	2210	2	Rubber protection	
11	2211	2	Plastic endpiece	
12	0138	2	Bolt M12x80	
13	0105	2	Nut M12	
14	0094	4	Self locking nut M12	
15	0114	8	Bolt M14x70	
16	0102	8	Self locking nut M14	
17	2217	2	Toweye	

Table 4.2 Spare parts alu. frame

DTA Outrigger (optional)

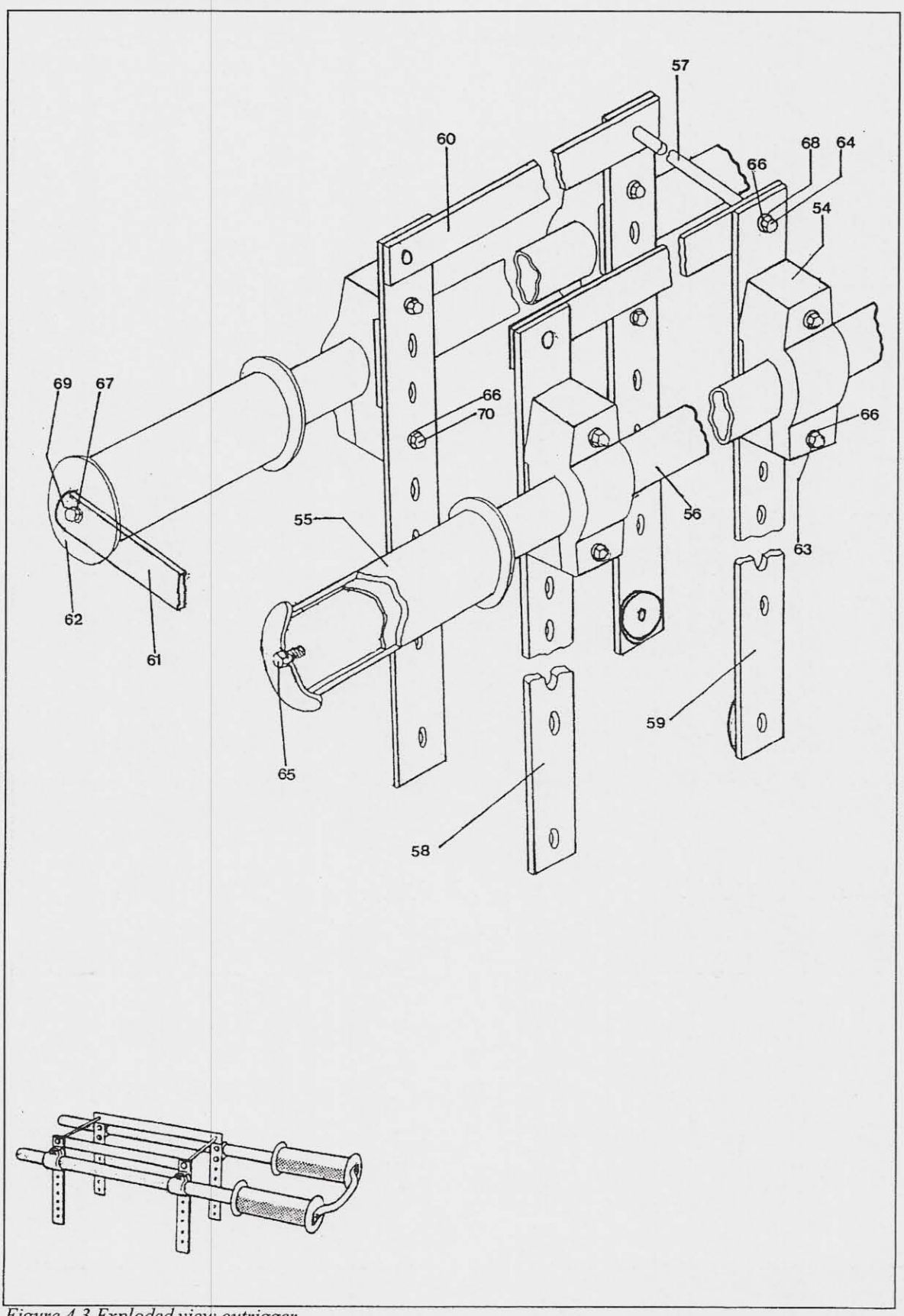

Figure 4.3 Exploded view outrigger

DTA Outrigger (optional)

Index	Ordernumber	Quantity	Description	
54	2254	4	Alu. clamp	
55	2255	2	Rubber roll	
56	2256	2	Bushing for rubber roll	
57	2257	2	Connecting bushing	
58	2258	2	Adjusting plate	
59	2259	2	Idem,	
60	2260	2	Connecting plate	
61	2261	1	Connecting plate roller endpiece	
62	2262	2	Spacing ring (large)	
63	0116	8	Bolt M10x100	
64	0132	4	Bolt M10x30	
65	0134	2	Bolt M12x35	
66	0156	20	Washer M10	
67	0157	2	Washer M12	
68	0170	4	Springwasher	
69	0169	2	Washer M12	
70	0093	8	Self locking nut M10	

Table 4,3 Spare parts outrigger

A.1 Product specifications

System process	concrete compaction, smoothing and leveling.
Process	Generating mechanical vibrations via electric motor or petrol-engine.
Noise production	In open air max. 75 dB (A)
Vibr.acceleration	< 1,5 m/s2
Maintenance	Cleaner; water (brush)
Power consumption	See technical specifications
Working area	• Portable execution •Total incl.alu.frame 350x100cms up to 750x100cms.
System mass Vibr.unit+alu.frame	Min. 60 Kgs – max. 110 kgs. (without outrigger) (see also table 1.0 & 1.1 of chaper " Introduction "

Table A.1 Productspecification

A.2 Review of the stickers

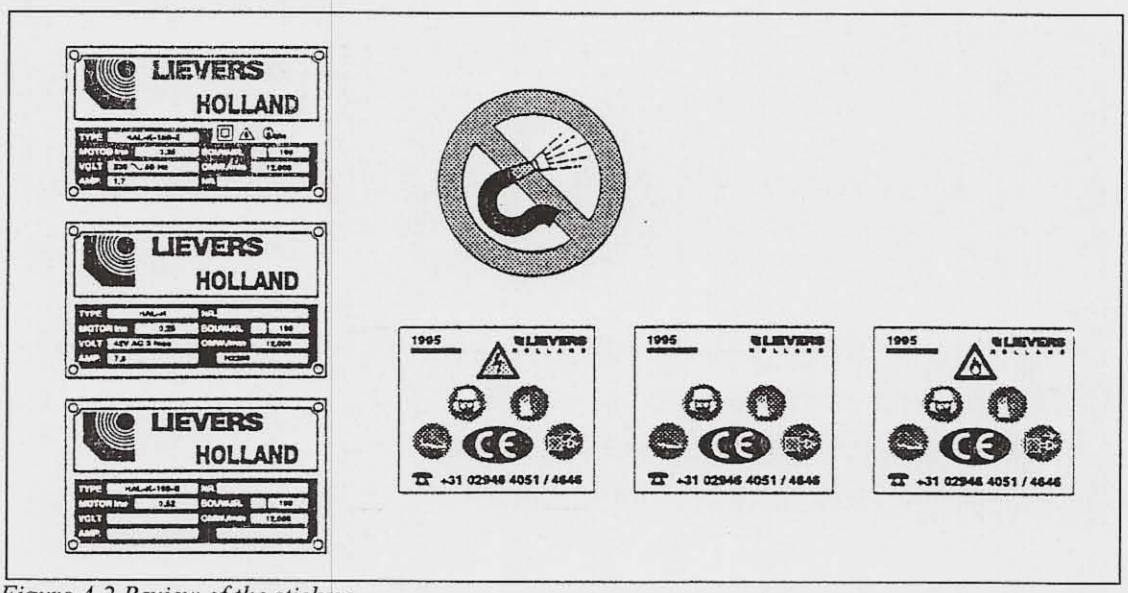

Figure A.2 Review of the stickers

B. 1 Electrical diagram

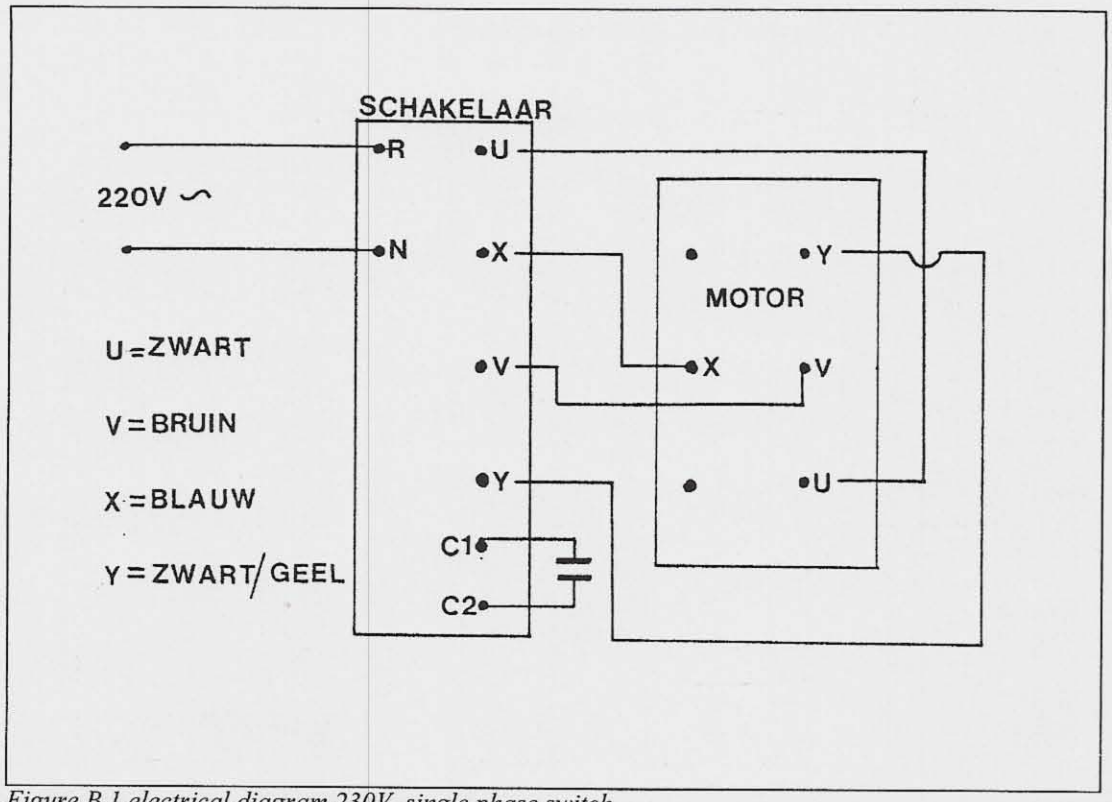

Figure B.1 electrical diagram 230V. single phase switch.

B.2

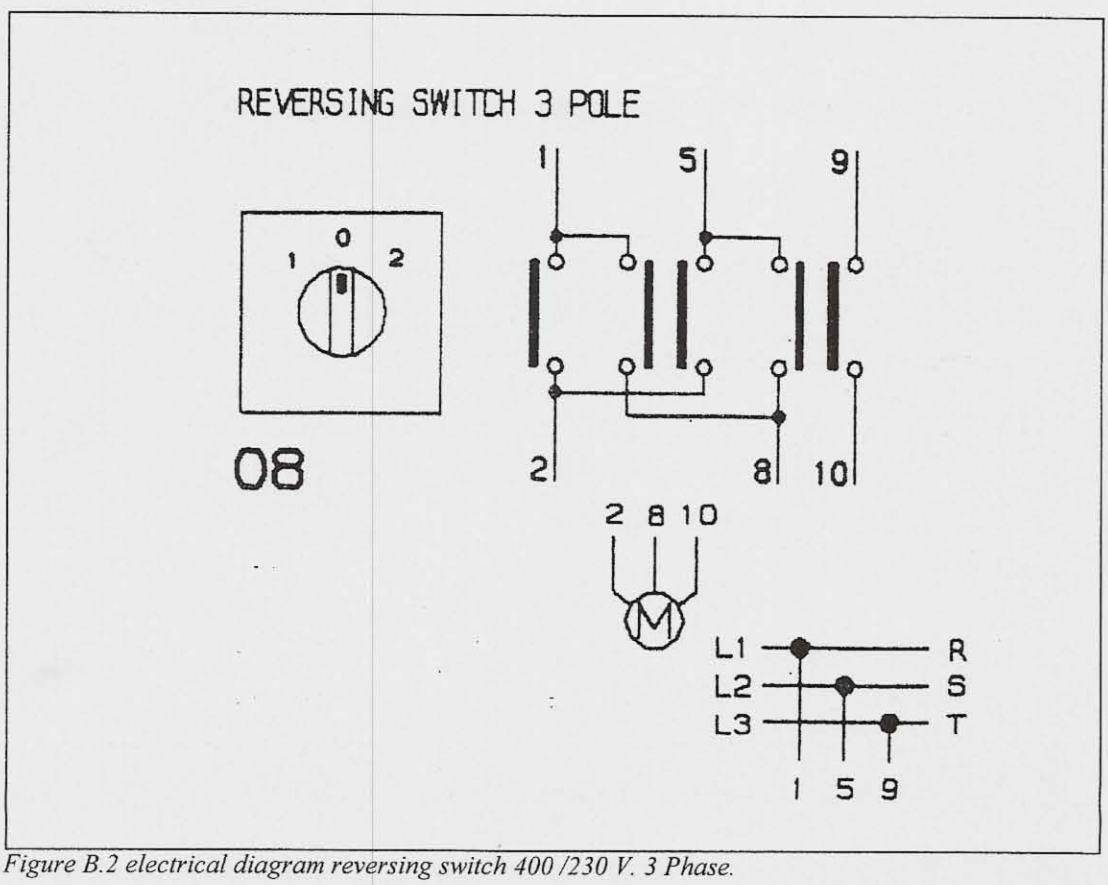

Figure B.2 electrical diagram reversing switch 400 /230 V. 3 Phase.